DLD4300-L / DLO4300-L V1
43” TFT LCD, LED Backlight 2500nits, FHD(1920x1080)

The DLD/DLO4300-L is a 43 inch industrial grade sunlight readable and high brightness 2500 nits and high color saturation, it produce sharp images, crisp text and lifelike colors. The Durapixel LED backlight technology ensures high reliability and low power consumption, suitable for outdoor application, kiosk, factory automation, military, transportation, gaming and medical, application.

Key Features

- High Brightness 2500 nits
- Sunlight Readable
- LED Backlight
- Low Power Consumption
- LCD Blacking Defect Free (H-Tni 110℃)
- Slim Bezel
- BL MTBF: 100,000 hours

Specifications

Model Name	DLD4300-L / DLO4300-L V1
Description	43” TFT LCD, LED Backlight 2500 nits, FHD (1920x1080)
Screen Size	43”
Display Area (mm)	941.184(H) x 529.416(V)
Brightness	2500 cd/m^2
Resolution	1920x1080
Aspect Ratio	16 : 9
Contrast Ratio	1500 : 1
Pixel Pitch (mm)	0.4902(H) x 0.4902(V)
Pixel Pre Inch (PPI)	51
Viewing Angle	178°(H),178°(V)
Color Saturation (NTSC)	80%
Display Colors	16.7M
Response Time (Typical)	12ms
Video Interface	VGA, DVI-D, HDMI, DP
Input Power	AC 100~240V
Power Consumption	189W
Dimensions (mm)	971.6 x 559.8 x 88 & 971.6 x 600.6 x 88.5
Bezel Size(U/B/L/R)	13.2/13.2/13.3/13.3 mm
Weight (Net)	21kg & 22kg
Mounting	100 x 400
OSD Key	4 Keys (Power Switch, Menu, +, -)
OSD Control	Brightness, Color, Contrast, Auto Turing, H/V Position…etc
Operating Temperature	0 ˚C ~ 50 ˚C
Storage Temperature	-20 ˚C ~ 60 ˚C
Product Approval	CE/FCC

DLD & DLO= Panel+ LED Driving Board + AD Control Board

Specifications are subject to change without notice.
All brands or product names are trademarks or registered trademarks of their respective companies.

製品のお見積り・お問い合わせは
株式会社プラズモニックジャパン までご連絡ください。
連絡先：(045) 663 1402　メール：info@plazmonic.jp

Mechanical Drawing

Outline Dimensions Unit:mm

DLD4300-L

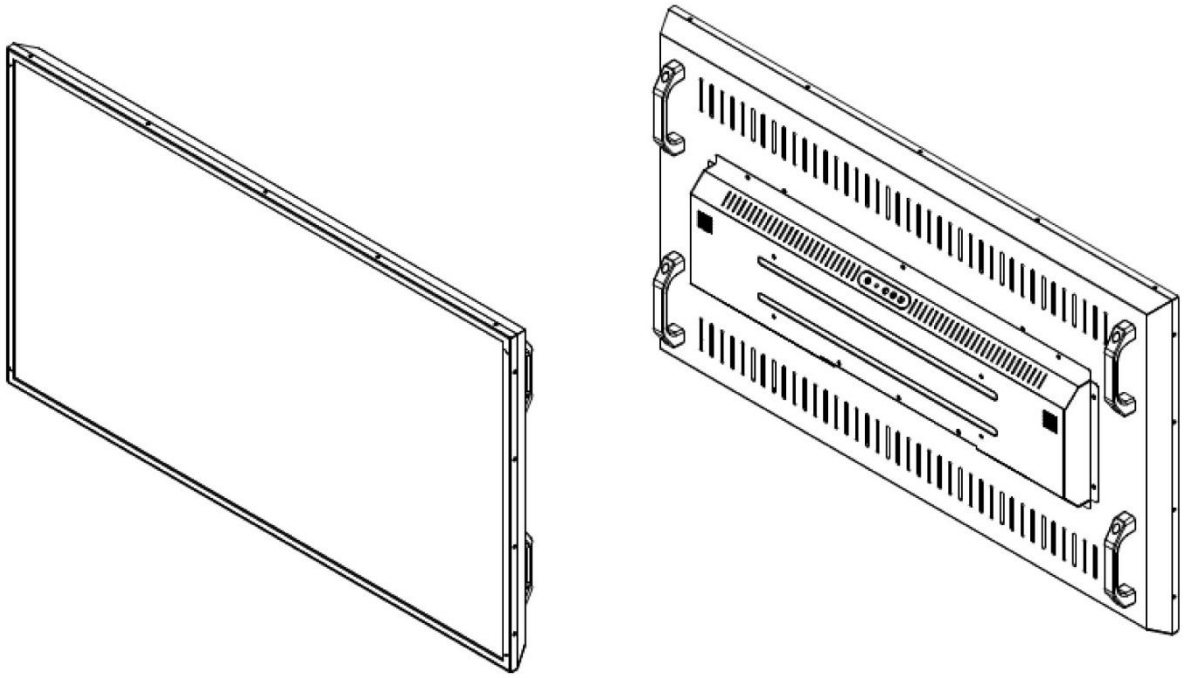

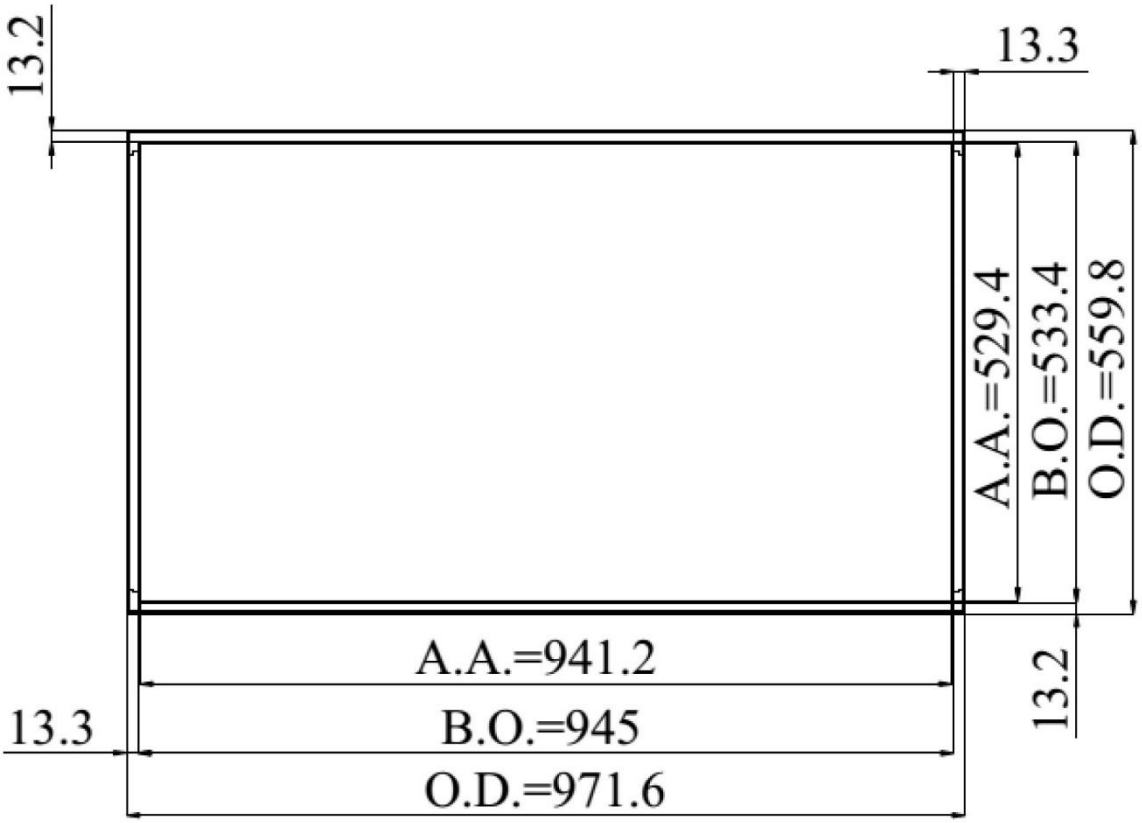

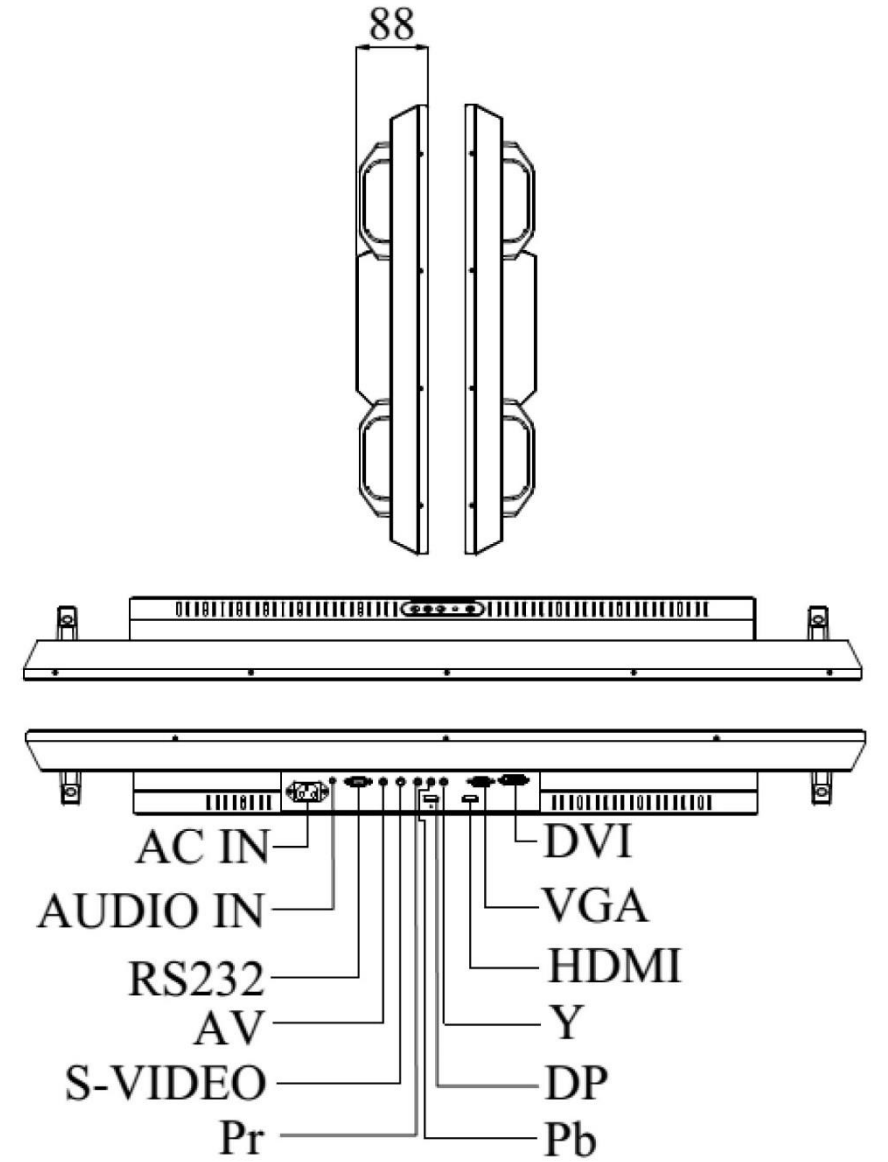
88
AC IN
AUDIO IN
RS232
AV
S-VIDEO
Pr
DVI
VGA
HDMI
Y
DP
Pb

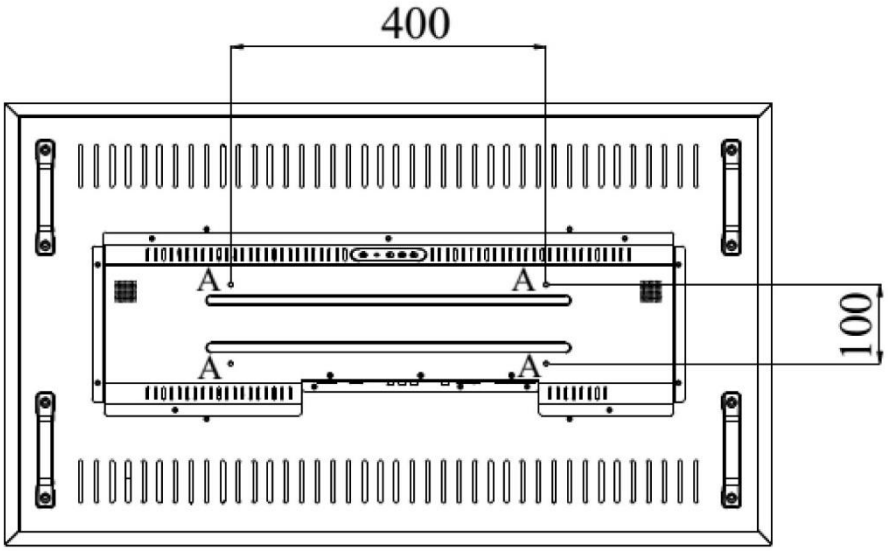
400
100
A
A
A
A

DLO4300-L

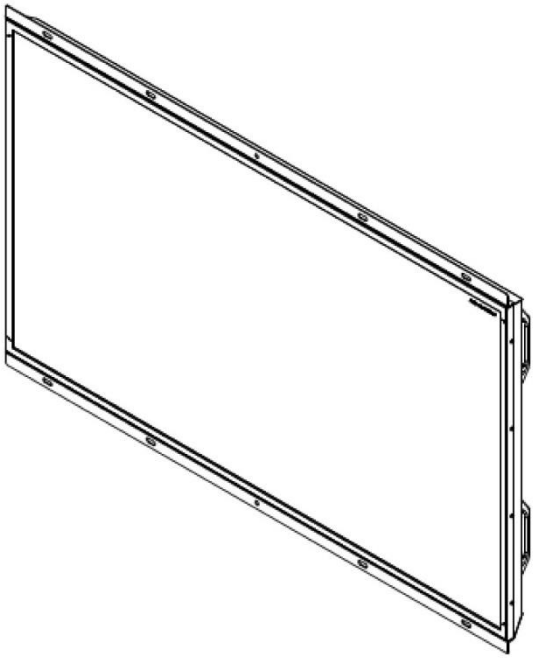

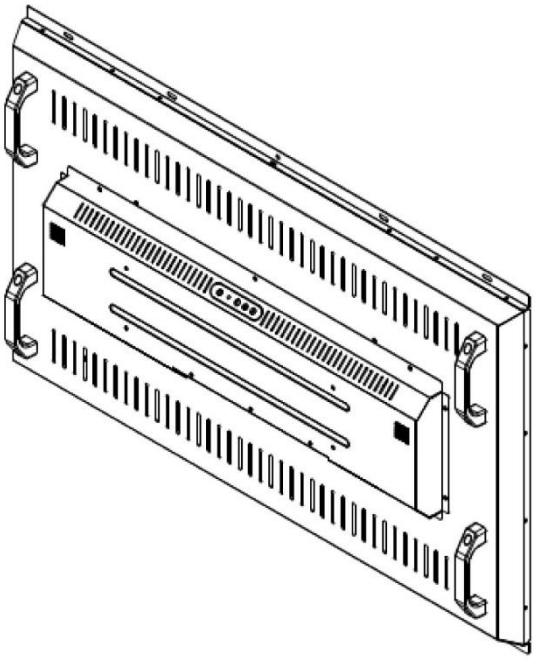

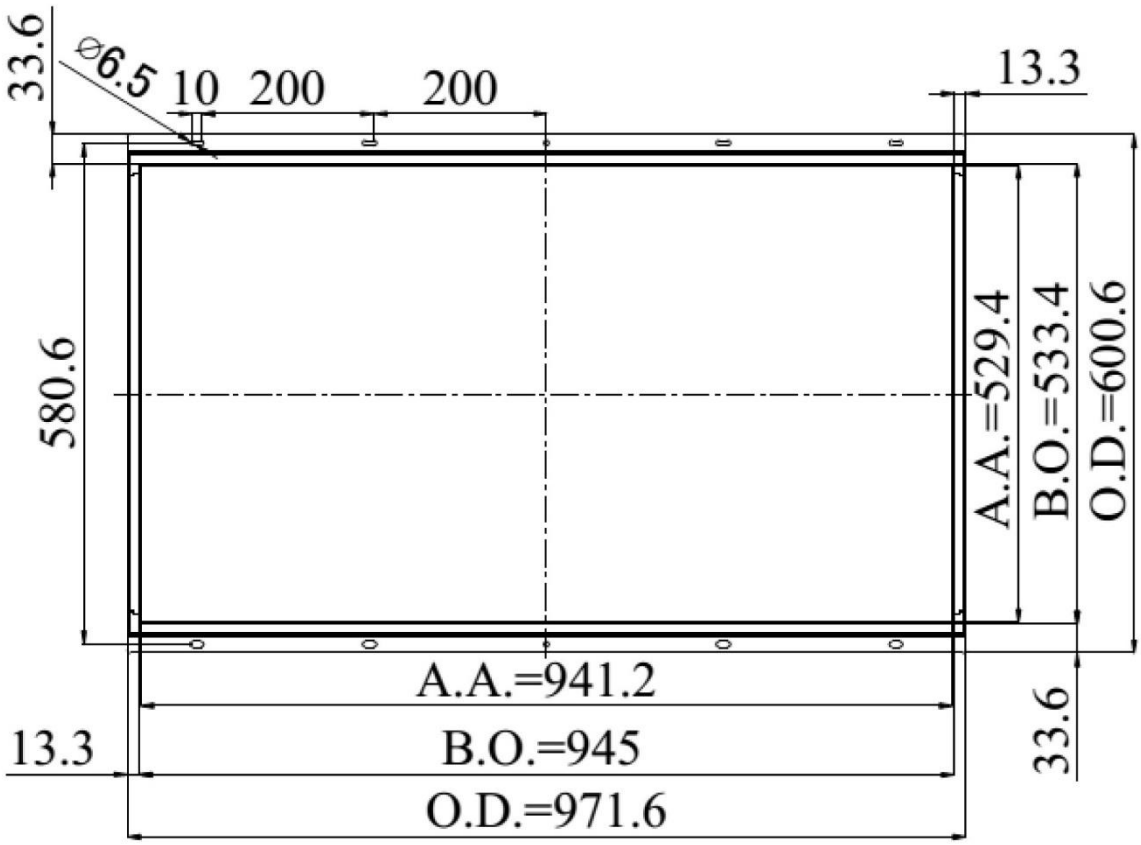
33.6
Ø6.5
10
200
200
13.3
580.6
A.A.=529.4
B.O.=533.4
O.D.=600.6
A.A.=941.2
13.3
B.O.=945
33.6
O.D.=971.6

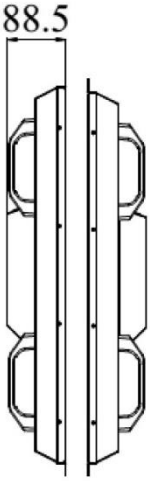

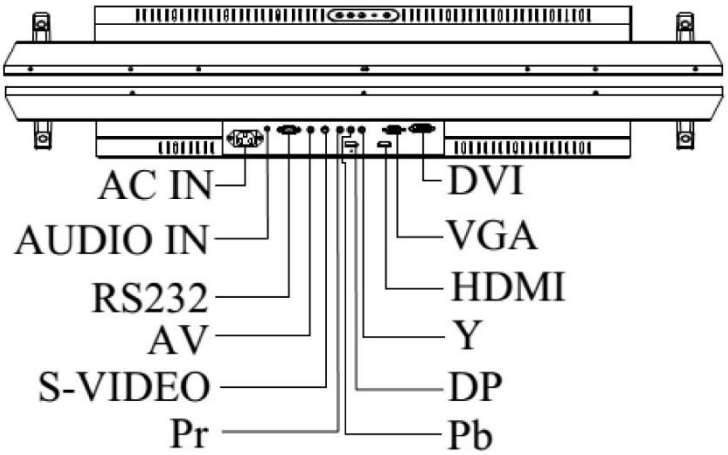

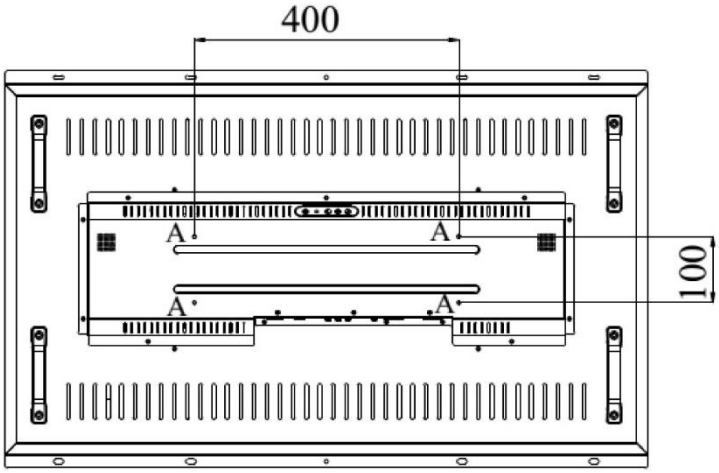

NOTE：
O.D.：OUTLINE DIMENSION
B.O.：BEZEL OPENING
A.A.：LCD ACTIVE AREA

A：4-M6_USER HOLE_MAX. DEPTH=6 mm

Ordering Information

Part Number	Description
DLD4300-LNB-J01	**43",2500nits,FHD,LID43A,AD5827GDHP,O/B,Speaker*2,AC100~240V,V1**
DLO4300-LNB-J01	**43",2500nits,FHD,LID43A,AD5827GDHP,O/B,Speaker*2,AC100~240V,V1**

Optional Accessories

Part Number	Description
810618301010	CABLE.POWER.AC.1830mm USA type
810618301090	CABLE,POWER,AC,1830mm Europe type
810618301050	CABLE.POWER.AC.1830mm UK type
810618301170	CABLE.POWER,AC,1830mm Australia type
810618301031	CABLE.POWER.AC.1830mm Japan type

Customer request

Glass	Tempered glass, AR coating……..

製品のお見積り・お問い合わせは
株式会社プラズモニックジャパン までご連絡ください。
連絡先：(045) 663 1402　メール：info@plazmonic.jp